If this SOP is accessed electronically, it is an uncontrolled copy and will not be updated.



STANDARD OPERATING PROCEDURE

# AMMONIA BY FLOW INJECTION ANALYSIS

SOP No.: GEN-350.1

Revision: 9

Effective date: February 23, 2012

Approved by: _____ Supervisor — 1/24/12 Date

_____ QA Manager — 1/24/12 Date

_____ Laboratory Manager — 1/24/12 Date

**COLUMBIA ANALYTICAL SERVICES, INC.**
1317 South 13th Avenue
Kelso, Washington 98626

© Columbia Analytical Services, Inc. 2012

| DOCUMENT CONTROL | |
|---|---|
| NUMBER: | |
| Initials: | Date: |

If this SOP is accessed electronically, it is an uncontrolled copy and will not be updated.



# AMMONIA BY FLOW INJECTION ANALYSIS

## 1. SCOPE AND APPLICATION

1.1. This procedure is used to determine the concentration of Ammonia in aqueous samples including water, wastewater, and groundwater using EPA Method 350.1 and Standard Methods 4500 $NH_3$ G. Ammonia in soil samples can be determined following extraction in a potassium chloride solution.

1.2. This method is applicable for the determination of ammonia concentrations in a range of 0.01 mg/L to 5.0 mg/L. The MRL for this test is 0.05 mg/L and the MDL as been determined at 0.02 mg/L. The MRL and MDL for low level ammonia analysis have been determined as 0.01 mg/L and 0.003 mg/L respectively.

1.3. In cases where there is a project-specific quality assurance plan (QAPP), the project manager identifies and communicates the QAPP-specific requirements to the laboratory. In general, project specific QAPP's supersede method specified requirements.

## 2. METHOD SUMMARY

2.1. For EPA 350.1, water samples are distilled into a solution of boric acid or 0.04N sulfuric acid, using the procedure described in and 350.2 and SM 4500 $NH_3$ B. Standard Methods 4500 $NH_3$ G may be performed with or without sample distillation.

2.2. Soil and sediment samples are extracted with 2M KCL using a wrist action shaker and extracts analyzed using the water procedure (based on the Plumb extraction procedure).

2.3. Ammonia reacts with alkaline phenol, then with sodium hypochlorite to form indophenol blue. Sodium nitroprusside (nitroferricyanide) is added to enhance sensitivity. The absorbance of the reaction product is measured at 660 nm, and is directly proportional to the original ammonia concentration in the sample.

## 3. DEFINITIONS

3.1. Stock standard solution - a concentrated solution containing a single certified standard that is a method analyte. Stock solutions are used to prepare calibration standards.

3.2. Calibration standards - a solution of analytes prepared in the laboratory from stock standard solutions, diluted as needed, and used to calibrate the instrument response with respect to analytical concentration.

3.3. Independent Calibration Verification (ICV) - Initial calibration verification standards which are analyzed after initial calibration with newly prepared standards but prior to sample

If this SOP is accessed electronically, it is an uncontrolled copy and will not be updated.



analysis, in order to verify the validity of the standards used in calibration. The ICV standards are prepared from a materials obtained from a source different from that used to prepare calibration standards. If the LCS is obtained from a independent source, it may be used as the ICV.

3.4. Laboratory Control Standards (LCS) - The LCS is an aliquot of analyte free water or analyte free solid to which known amounts target analytes are added. The LCS is prepared and analyzed in exactly the same manner as the samples. The percent recovery is compared to established limits and assists in determining whether the batch is in control. If the LCS is prepared using a solution independent from the calibration standards, then it may be also used as an ICV.

3.5. Method Blank (MB) - a solution of the laboratory prepared deionized water that is carried through analysis like a sample, to serve as a measure of contamination associated with laboratory storage, preparation, or instrumentation.

3.6. Continuing calibration verification standard (CCV) - a solution of analytes prepared in the laboratory from stock standards to be at approximately the midpoint of calibration curves. CCV's are analyzed every 10 injections to verify that the instrument system performance has not changed during the course of the analytical run.

3.7. Continuing calibration blank (CCB) - a blank solution of deionized water. CCB's are analyzed every 10 injections to verify that the instrument system has not become contaminated during the course of the analytical run.

3.8. Sample Duplicate - two aliquots of the same sample that are treated exactly the same throughout laboratory analytical procedures. The purpose is to verify the precision associated with the laboratory procedures.

3.9. Matrix Spike - aliquots of sample to which known amounts of an analyte of interest has been added. These are treated exactly the same throughout laboratory analytical procedures. The purpose of a matrix spike is to determine whether the sample matrix contributes bias to the analytical results.

3.10. Analytical Run Sequence - Samples are analyzed in a set referred to as an analysis sequence. The sequence begins with the instrument calibration or calibration verification followed by samples interspersed with calibration standards. The sequence ends when the set of samples has been injected or when qualitative and/or quantitative QC criteria are exceeded.

3.11. Linear calibration Range (LCR) – The concentration range over which the instrument response is linear.

## 4. INTERFERENCES

4.1. Calcium and magnesium ions may precipitate if present in sufficient concentration. Tartrate or EDTA is added to the sample in-line in order to prevent this problem.

4.2. Color, turbidity and certain organic species may interfere. Turbidity is removed through manual filtration.

4.3. Over-acidic samples create a negative interference resulting in an inverted peak with samples that are at or near the method reporting limit.

4.4. Ensure that the pH of the dilution water and standard $NH_3$ solution approximates that of the sample.

## 5. SAFETY

5.1. All appropriate safety precautions for handling solvents, reagents and samples must be taken when performing this procedure. This includes the use of personnel protective equipment, such as, safety glasses, lab coat and the correct gloves.

5.2. Chemicals, reagents and standards must be handled as described in the CAS safety policies, approved methods and in MSDSs where available. Refer to the CAS Environmental, Health and Safety Manual and the appropriate MSDS prior to beginning this method.

5.3. Sodium Hydroxide (NaOH) is a strong caustic and a severe health and contact hazard. Use nitrile or latex gloves while handling pellets or preparing solutions.

5.4. Phenol causes severe burns and is an extreme health hazard through skin absorption. Wear proper protective laboratory clothing including gloves and rinse any exposed skin <u>IMMEDIATELY</u> with copious amounts of water.

## 6. SAMPLE HANDLING AND PRESERVATION

6.1. Water samples

6.1.1. Samples should be collected in plastic or glass bottles. Bottles must be purchased as pre-cleaned containers or thoroughly cleaned and rinsed with reagent water. The volume collected should be sufficient to insure a representative sample, allow for replicate analysis.

6.1.2. Water samples are preserved immediately upon sampling or as soon as possible with $H_2SO_4$ to pH <2 and stored at $4\pm2^{o}$ C until time of analysis. Analysis is to be performed within 28 days of sampling.

6.2. Soils/sediment samples

6.2.1. Samples should be collected in glass jars and stored in a field-moist condition. Ammonia may be lost by volatilization due to drying or thawing.

6.2.2. Extraction is to be performed within 7 days of sampling. Extracts may be preserved with 9N sulfuric acid and stored for up to 28 days until analysis.

## 7. APPARATUS

7.1. Easy-Still Ammonia Distillation Apparatus. Components are boiling tubes, sloped T-joints, glass stoppers, Allihn condensers, and condenser stems.

7.2. Flow Injection Analyzer with associated software and computer system. The two systems currently in use are listed below.

7.2.1. Lachat QuikChem AE

7.2.2. Bran & Luebbe AutoAnalyzer

7.3. Heating unit associated with the FIA.

7.4. Wrist Action Shaker

7.5. Filter Funnel and Whatman 934-AH or equivalent

7.6. Glassware

7.6.1. Standard laboratory glassware.

7.6.2. Class A volumetric flasks and pipettes.

## 8. REAGENTS

8.1. Reagent grade chemicals shall be used in all tests. Other grades may be used, provided it is first ascertained that the reagent is of sufficiently high purity to permit its use without lowering the accuracy of the determination. The preparation for all laboratory prepared reagents and solutions must be documented in a laboratory logbook. Refer to the SOP *Reagent/Standards Login and Tracking (ADM-RTL)* for the complete procedure and documentation requirements.

8.2. Dechlorinating reagents

If this SOP is accessed electronically, it is an uncontrolled copy and will not be updated.



8.2.1. Sodium thiosulfate: Dissolve 3.5 g $Na_2S_2O_3C5{\cdot}H_2O$ in reagent water and dilute to 1L. One mL of this solution will remove 1 mg/L of residual chlorine in 500 mL of sample.

8.2.2. Sodium sulfite: Dissolve 0.9 g $Na_2SO_3$ in reagent water and dilute to 1L. One mL removes 1 mg/L Cl per 500 mL of sample.

8.3. Sodium Hydroxide Solution, 6N, dissolve 48 g of NaOH pellets in 150 ml deionized water. Dilute to 200 ml, cool and store in plastic container.

8.4. KCl, 2M, dissolve 150g of KCl in 1L deionized water.

8.5. Boric Acid Solution, 2% (w/v), dissolve 20.0 g of H3BO3 in deionized water. Dilute to final volume of 1,000 ml.

8.6. Sulfuric acid, 0.04N, 1.1 mL of concentrated sulfuric acid to 1L DI water.

8.7. Sulfuric acid, 9N.

8.8. Lachat analyses:

8.8.1. Sodium Phenolate: Add 83.0g phenol crystals to a 1L volumetric flask containing approximately 500mL of deionized water (DIW). Slowly add 32.0 g NaOH to the stirring phenolate mixture. Cool, dilute to the mark with DIW, and invert several times to mix. Do not allow solution to stand in hood for excessive amount of time. Refrigerate after use. Do not degas this reagent.

**CAUTION**: Phenol causes severe burns and is an extreme health hazard through skin absorption. Wear proper protective laboratory clothing including gloves and rinse any exposed skin IMMEDIATELY with copious amounts of water.

8.8.2. Sodium Hypochlorite: Mix 200 mL of Ultra Clorox Bleach (only this brand is recommended) to 250 mL of DIW. Make fresh daily.

8.8.3. Buffer: In a 1 L volumetric flask dissolve 50.0 g disodium ethylenediamine tetraacetate ($Na_2$ EDTA) and 5.5 g NaOH in approximately 900mL of DIW. Dilute to the mark and invert several times to mix. Make monthly.

8.8.4. Sodium Nitroprusside (nitroferricyanide): Dissolve 3.50 g sodium nitroprusside in a 1L volumetric containing DIW. Dilute to mark and invert to mix. Do not degas this reagent.

8.8.5. 2M Potassium Chloride (KCl): Dissolve 597 g of potassium chloride in DIW and take to a 4 L final volume.

8.9. Bran & Luebbe analyses - For analysis performed on the Bran & Luebbe analyzer, refer to the Bran & Luebbe method attachment for reagents used and preparation instructions.

8.10. Stock Standard 10,000 mg/L: In a 1L volumetric flask containing approximately 800 mL of DIW dissolve 38.19 g of ammonium chloride ($NH_4Cl$) that has been dried for two hours at $110^o$ C. Dilute to the mark and invert to mix. The stock standard is stored at room temperature and is good for six months from the date of preparation.

8.11. Working Standard 100 mg/L: To a 100 mL volumetric flask containing DIW add 1 mL of 10,000 ppm stock standard. Dilute to the 100 mL mark. The working standard is stored at room temperature and is good for seven days from the date of preparation.

8.12. Prepare a series of at least three standards and a blank by diluting a known amount into 100 ml volumetric flask. See Table 1 and Table 2 for preparation amounts and concentrations. The calibration standards are stored at room temperature and are good for seven days from the date of preparation.

**Note:** Standards for soil extracts are prepared as in Table 1, except that the standards are diluted into **2M KCL INSTEAD of DIW.**

8.13. Since the intensity of the color used to quantify the concentration is pH dependent, the acid concentration of the wash water and the standard ammonia solutions should approximate that of the samples.

## 9. RESPONSIBILITIES

9.1. It is the responsibility of the analyst to perform the analysis according to this SOP and to complete all documentation required for data review. Analysis and interpretation of the results are performed by personnel in the laboratory who have demonstrated the ability to generate acceptable results utilizing this SOP. This demonstration is in accordance with the training program of the laboratory. Final review and sign-off of the data is performed by the department supervisor/manager or designee.

9.2. It is the responsibility of the department supervisor/manager to document analyst training. Training and proficiency is documented in accordance with the SOP for Documentation of Training (ADM-TRANDOC).

## 10. PREVENTIVE MAINTENANCE

10.1. All maintenance activities are recorded in a maintenance logbook kept for each instrument. Pertinent information (serial numbers, instrument I.D., etc.) must be in the logbook. This includes the routine maintenance described in section 10. The entry in the log must include: date of event, the initials of who performed the work, and a reference to analytical control.

10.2. Change reagent and sampling lines when they are flat.

If this SOP is accessed electronically, it is an uncontrolled copy and will not be updated.



10.3. For problems encountered with the analyzer operation, refer to the applicable manufacturer's operating and/or troubleshooting information (Lachat troubleshooting guide, Bran&Luebbe manual).

## 11. PROCEDURE

11.1. Sample preparation – water samples

**Note:** NPDES final effluent samples must be distilled unless otherwise allowed or approved by the client. The distilled results are compared to non-distilled results. If the results are considered equivalent, distillation of subsequent samples of the same effluent is not required. All comparative studies are performed on a client basis and all associated data is kept on file in the General Chemistry lab.

11.1.1. Sample Dechlorination - If the water sample contains residual chlorine, add a dechlorination agent, such as sodium thiosulfate or ascorbic acid, to the sample. Check for residual chlorine by placing a drop of sample on potassium-iodide test paper. Samples should be dechlorinated at the time of collection.

11.1.2. Adjust the pH of a 50-ml sample aliquot to pH 9.5. Add 6 N NaOH dropwise, with mixing, to the sample to adjust the sample pH to 9.5. Check the sample pH with a narrow range pH paper. Add 2.5 ml borate buffer solution; mix sample. Check pH and re-adjust sample to final pH of 9.5 if necessary.

11.1.3. Place the pH adjusted sample in a boiling tube. Add 2-3 micro-porous boiling stones. Assemble the distillation apparatus in the heater block.

11.1.4. Place 5.0 ml of receiving solution in 50-ml centrifuge tube. Place the centrifuge tube in the base slot of the heating block. Select the receiver solution according to analysis method to be used on distillate.

11.1.5. Place the condenser stem in the centrifuge tube, slide cylinder and stem under condenser, and connect stem to condenser with WestClip. When assembled, the condenser tip of the distillation apparatus will be submerged in the receiving solution contained in the centrifuge tube.

11.1.6. Heat the distillation apparatus - Set heater block temperature controls to the following settings:

| | | | |
|---|---|---|---|
| RATE1: | 15 °C/min | RATE2: | 0 |
| TEMP1: | 210 °C | TEMP2: | 210°C |
| TIME1: | 2.0 Hour (max) | TIME2: | 0 |

Timing Configuration: CONF1

If this SOP is accessed electronically, it is an uncontrolled copy and will not be updated.



11.1.7. Collect a minimum of 20 ml if distillate.

11.1.8. Discontinue heating. Remove the stopper from the top of the "T"-joint. The stopper removal is needed to prevent the collected distillate from being sucked back into the apparatus during cooling.

11.1.9. Disconnect the stem from the condenser. Remove the graduated cylinder from the apparatus and dilute the collected distillate to final volume of 50 ml with deionized water.

11.2. Soil sample extraction

11.2.1.1. Weigh out 10 g of sample into a 50 mL centrifuge tube.

11.2.1.2. Spike appropriate QC sample with 0.5 mL of 10,000 ppm $NH_3$ stock solution.

11.2.1.3. Bring to 50mL volume with 2M KCl. The Method blank contains only KCl.

11.2.1.4. Shake samples for 30 minutes on the wrist-action shaker.

11.2.1.5. Centrifuge samples for 10-20 minutes.

11.2.1.6. Filter supernatant with 0.45$\mu$m filter. Samples are now ready for analysis.

11.3. Soil and sediment extraction - Plumb extraction procedure:

11.3.1.1. Weigh 20g of sample into a 50mL centrifuge tube.

11.3.1.2. Spike appropriate QC sample with 1.0 mL of 10,000 ppm $NH_3$ stock solution.

11.3.1.3. Bring to 50mL volume with 2M KCl. The Method blank contains only KCl.

11.3.1.4. Shake samples for 30 minutes on the wrist-action shaker.

11.3.1.5. Centrifuge samples for 10-20 minutes.

11.3.1.6. Filter supernatant with 0.45$\mu$m filter into a 100mL volumetric flask.

If this SOP is accessed electronically, it is an uncontrolled copy and will not be updated.



11.3.1.7. Wash the remaining solids with an additional 50mL of 2M KCl and filter into the volumetric flask. Bring to volume with 2M KCl. Samples are now ready for analysis.

11.4. Sample analysis - Lachat system

11.4.1. Set up instrument according to the Lachat QuikChem method 10-107-06-1-B (See Attachments).

Note: 2M KCl may be used for a sample carrier when running extracts instead of DIW.

11.4.2. The Linear Calibration Range (LCR) must be determined initially and verified every six months or whenever a significant change in instrument response is observed or expected. The initial demonstration of linearity must use sufficient standards to insure that the resulting curve falls in the linear range of the instrument. The verification of linearity must use a minimum of a blank and three standards. If any verification data exceeds the initial values by ±10%, linearity must be reestablished. If any portion of the range is shown to be nonlinear, sufficient standards must be used to clearly define the nonlinear portion.

11.4.3. Analyze the calibration standards listed in Table 1. The calibration curve is fitted to a linear, least squares model. See Appendix A. The correlation coefficient must be > 0.995. If the calibration criteria are met, continue with the analysis sequence in Table 2. If the LCS/ICV recovery is within ± 10% of the true value, proceed with analysis of samples. If not, determine the cause of the problem, correct it, and then recalibrate.

11.4.4. Place samples and QC aliquots in sampler vials and arrange on autosampler according to Table 3.

11.4.5. Repeat sequence bracketing every 10 samples with CCV and CCB. End the sample tray (sequence) with CCV and CCB.

11.5. Calibration and Sample Analysis– Bran&Luebbe System

11.5.1. Set up instrument according to the Bran&Luebbe method US-696D-82X (See Attachments).

**Note:** 2M KCl may be used for a sample carrier when running extracts instead of DIW.

11.5.2. Analyze the calibration standards listed in Table 1 (regular level) or Table 2 (low level). The calibration curve is fitted to a linear, least squares model. See Appendix A. The correlation coefficient must be > 0.995.

If this SOP is accessed electronically, it is an uncontrolled copy and will not be updated.



11.5.3. After the calibration is established, it must be verified by the analysis of an ICV or a LCS if prepared from an independent source. If the ICV is within ± 10% of the true value, then analysis may proceed (see Table 3). If not, determine the cause of the problem, correct it, and then recalibrate.

11.5.4. Ensure that the pH of the dilution water and standard $NH_3$ solution approximates that of the samples. Place samples and QC aliquots in sampler vials and arrange on autosampler according to Table 3.

11.5.5. Repeat sequence bracketing every 10 samples with CCV and CCB. End the sample tray (sequence) with CCV and CCB.

## 12. QUALITY CONTROL

12.1. Initial Precision and Recovery Validation

12.1.1. The accuracy and precision of the procedure must be validated before analyses of samples begin, or whenever significant changes to the procedures have been made. To do this, four water samples are spiked with the LCS spike solution, then prepared and analyzed.

12.2. Method Detection Limits and Method Reporting Limits

12.2.1. A method detection limit (MDL) study must be undertaken before analysis of samples can begin. To establish detection limits that are precise and accurate, the analyst must perform the following procedure. Spike seven blank matrix (water or soil) samples with MDL spiking solution at a level below the MRL. Follow the analysis procedures in Section 11 to analyze the samples.

12.2.2. Calculate the average concentration found (x) in µg/mL, and the standard deviation of the concentrations (s) in µg/mL for each analyte. Calculate the MDL for each analyte. Refer to the CAS *SOP Performing Method Detection Limit Studies and Establishing Limits of detection and Quantification (ADM-MDL).* The MDL study must be verified annually.

12.2.3. The Method Reporting Limits (MRLs) used at CAS are the routinely reported lower limits of quantitation which take into account day-to-day fluctuations in instrument sensitivity as well as other factors. These MRLs are the levels to which CAS routinely reports results in order to minimize false positive or false negative results. The MRL is normally two to ten times the method detection limit.

12.3. Ongoing QC Samples required are described in the CAS-Kelso Quality Assurance Manual and in the SOP for Sample Batches. Additional QC Samples may be required in project specific quality assurance plans (QAPP). General QC Samples are:

If this SOP is accessed electronically, it is an uncontrolled copy and will not be updated.



12.3.1. The Linear Calibration Range (LCR) must be determined initially and verified every six months or whenever a significant change in instrument response is observed or expected. The initial demonstration of linearity must use sufficient standards to insure that the resulting curve falls in the linear range of the instrument. The verification of linearity must use a minimum of a blank and three standards. If any verification data exceeds the initial values by ±10%, linearity must be reestablished. If any portion of the range is shown to be nonlinear, sufficient standards must be used to clearly define the nonlinear portion.

12.3.2. CCV (Continuing Calibration Verification): A CCV is analyzed every 10 samples using 2.0 mg/L $NH_3$ standard (from curve). Recovery must fall within 90-110% or 1.8-2.2 mg/L.

12.3.3. CCB (Continuing Calibration Blank): A blank consisting of the carrier solution (DIW or KCl). The result must be less than the absolute value of the Method Reporting Limit - $|MRL|$.

12.3.4. MB (Method Blank): Deionized water or KCl depending upon samples being analyzed, run every 20 or fewer samples. The result must be less than the absolute value of the Method Reporting Limit - $|MRL|$.

12.3.5. LCS (Laboratory Control Spike): Analyzed with each batch of 20 or fewer samples. An LCS must be run each day samples are analyzed. Reference current data quality objective table (DQO) for current recovery limit (Table 4).

12.3.6. Sample Duplicates: One sample per batch of 20 or fewer samples must be analyzed in duplicate. Relative Percent Difference must be $\leq$ 20%.

Calculate Relative Percent Difference (RPD) as:

$$\% RPD = \frac{|R1 - R2|}{(R1 + R2) / 2} \times 100$$

Where R1= result for the sample
R2= result for the sample duplicate

12.3.7. Matrix Spike: One spiked sample must be analyzed every 10 samples or less for 350.1 and every 20 samples or less for SM 4500 $NH_3$ G. The spiked sample may be the same sample used for the duplicate. Reference current data quality objective table (DQO) for current recovery limits (Table 4).

12.3.8. Sample Duplicates - One sample per batch of 20 or fewer samples must be analyzed in duplicate. Relative Percent Difference must be $\leq$ 20%.

Calculate Relative Percent Difference (RPD) as:

$$\% RPD = \frac{|R1 - R2|}{(R1 + R2)/2} \times 100$$

Where R1= Higher Result
R2= Lower Result

## 13. DATA REDUCTION, REVIEW, AND REPORTING

**Comment [c1]:** Julie, I can't fix the formatting problem here…

13.1. Data Reduction

13.1.1. At the end of the analysis sequence, the calibration data is printed including the calculated standards concentrations, calibration statistics, and slope and intercept of the calibration curve.

13.1.2. The runtime report printed during the sampling run is turned in with a final report and calibration report.

13.1.3. For water samples the postrun report is saved to disk and prepared on EXCEL.

13.1.4. The postrun report for soils is printed at the Lachat, and the numbers transposed to the appropriate bench sheet. Results are calculated on the bench sheet with dry weights.

13.2. Reporting

13.2.1. Refer to the SOP for Data Reporting and Report Generation for reporting guidelines.

13.2.2. Reports are generated in the CAS LIMS by compiling the SMO login, sample prep database, instrument date, and client-specified report requirements (when specified). This compilation is then transferred to a file which Excel© uses to generate a report. The forms generated may be CAS standard reports, DOD, or client-specific reports. The compiled data from LIMS is also used to create EDDs.

13.2.3. As an alternative, reports are generated using Excel© templates located in R:\WET\Forms. The analyst should choose the appropriate form and QC pages to correspond to required tier level and deliverables requirements. The results are then transferred, by hand or electronically, to the templates and saved at R:\WET\WIP.

13.2.4. Report results to three significant figures. If sample was diluted report two significant figures.

13.2.5. Soil/sediment samples and undistilled water samples should be reported as method 350.1 Modified.

13.3. Data Review and Assessment

13.3.1. Following primary data interpretation and calculations, all data is reviewed by a secondary analyst. Following generation of the report, the report is also reviewed. Refer to the SOP for Laboratory Data Review Process for details. The person responsible for final review of the data report and/or data package should assess the overall validity and quality of the results and provide any appropriate comments and information to the Project Chemist to inclusion in the report narrative.

## 14. CONTENGENCIES FOR HANDLING OUT-OF-CONTROL OR UNACCEPTABLE DATA

14.1. Refer to the SOP for *Corrective Action (ADM-CA)* for procedures for corrective action. Personnel at all levels and positions in the laboratory are to be alert to identifying problems and nonconformities when errors, deficiencies, or out-of-control situations are detected.

14.2. Handling out-of-control or unacceptable data

14.2.1. On-the-spot corrective actions that are routinely made by analysts and result in acceptable analyses should be documented as normal operating procedures, and no specific documentation need be made other than notations in laboratory maintenance logbooks, runlogs, for example.

14.2.2. Documentation of a nonconformity must be done using a Nonconformity and Corrective Action Report (NCAR) when:

- Corrective action is not taken or not possible
- Corrective action fails to correct an out-of-control problem on a laboratory QC or calibration analysis.
- Reanalysis corrects the nonconformity but is not a procedurally compliant analysis.

## 15. METHOD PERFORMANCE

15.1. This method was validated through single laboratory studies of accuracy and precision. Refer to the reference method for additional method performance data available.

## 16. POLLUTION PREVENTION

16.1. It is the laboratory's practice to minimize the amount of solvents, acids and reagent used to perform this method wherever feasible. Standards are prepared in volumes consistent with methodology and only the amount needed for routine laboratory use is kept on site.

The threat to the environment from solvent and reagents used in this method can be minimized when recycled or disposed of properly.

## 17. WASTE MANAGEMENT

17.1. The laboratory will comply with all Federal, State and local regulations governing waste management, particularly the hazardous waste identification rules and land disposal restrictions as specified in the CAS EH&S Manual.

17.2. This method uses acid. Waste acid is hazardous to the sewer system and to the environment. All acid waste must be neutralized to a pH of 2.5-12 prior to disposal down the drain. The neutralization step is considered hazardous waste treatment and must be documented on the treatment by generator record. See the CAS EH&S Manual for details.

17.3. This method uses a base. Waste base is hazardous to the sewer system and to the environment. All waste must be neutralized to a pH of 2.5-12 prior to disposal down the drain. The neutralization step is considered hazardous waste treatment and must be documented on the treatment by generator record. See the CAS EH&S Manual for details

## 18. TRAINING

18.1. Training outline

18.1.1. Review literature (see references section). Read and understand the SOP. Also review the applicable MSDS for all reagents and standards used. Following these reviews, observe the procedure as performed by an experienced analyst at least three times.

18.1.2. The next training step is to assist in the procedure under the guidance of an experienced analyst for a period of 2 weeks. During this period, the analyst is expected to transition from a role of assisting, to performing the procedure with minimal oversight from an experienced analyst.

18.1.3. Perform initial precision and recovery (IPR) study as described above for water samples. Summaries of the IPR are reviewed and signed by the supervisor. Copies may be forwarded to the employee's training file. For applicable tests, IPR studies should be performed in order to be equivalent to NELAC's Initial Demonstration of Capability.

18.1.4. Training is documented following the SOP for Documentation of Technical Personnel Training.

18.1.5. NOTE: When the analyst training is documented by the supervisor on internal training documentation forms, the supervisor is acknowledging that the analyst has read and understands this SOP and that adequate training has been given to the analyst to competently perform the analysis independently.

## 19. METHOD MODIFICATIONS

19.1. There are no known modifications in this laboratory standard operating procedure from the reference method.

## 20. REFERENCES

20.1. Method 350.1 Determination of Ammonia Nitrogen by Semi-Automated Colorimetry, U.S. Environmental Protection Agency, Environmental Monitoring Systems Laboratory, Chemistry Research Division, Revision 2.0, August 1993

20.2. Methods 4500-NH3 B,G, Standard Methods for the Examination of Water and Wastewater, approved by SM Committee in 1997

20.3. Lachat QuikChem Method 10-107-06-1-B.

20.4. Bran & Luebbe Method US-696D-82X.

20.5. Recommended Protocols for Measuring Selected Environmental Variables in Puget Sound, January, 1996.

20.6. Procedures for Handling and Chemical Analysis of Sediment and Water Samples, Russell S. Plumb, U.S. EPA/Corps of Engineers Technical Committee on Criteria for Dredged Fill Material, May 1981.

## 19. CHANGES SINCE THE LAST REVISION

19.1. Sec 1.2 – updated MDL and last sentence is new
19.2. Sec 3.3 – last sentence is new
19.3. Sec 8.1 is new
19.4. Sec 10.1 is new
19.5. Sec 12.3.7 added clarification on method MS requirements
19.6. Sec 19 is new
19.7. Table 1 updated
19.8. Table 4 DQO is new

If this SOP is accessed electronically, it is an uncontrolled copy and will not be updated.



**TABLE 1**
**Calibration Standards Preparation**
**Regular Level Ammonia**

Routine Calibration Standards

| Volume of 100 µg/ml Solution (ml) | Final Volume (ml) | Standard Concentration (mg/L) |
|---|---|---|
| 0 | 100 | 0.00 |
| 0.05 | 100 | 0.05 |
| 0.50 | 100 | 0.50 |
| 2.00 | 100 | 2.00 |
| 5.00 | 100 | 5.00 |

**TABLE 2**
**Calibration Standards Preparation**
**Low Level Ammonia**

Low Level Calibration Standards

| Volume of 10 µg/ml Solution (ml) | Final Volume (ml) | Standard Concentration (mg/L) |
|---|---|---|
| 0 | 100 | 0.00 |
| 0.10 | 100 | 0.01 |
| 0.50 | 100 | 0.05 |
| 2.50 | 100 | 0.25 |
| 5.00 | 100 | 0.50 |

Note: For low level analysis, change sample tubing from 0.16”ID (orn/yel) to 0.42”ID (orn/orn).

If this SOP is accessed electronically, it is an uncontrolled copy and will not be updated.



**TABLE3**
**Analytical Run Scheme**

| Step | Sample |
|---|---|
| 1 | CCV-1 |
| 2 | CCB-1 |
| 3 | Method Blank |
| 4 | LCS |
| 5 | Sample |
| 6 | Sample Dup |
| 7 | Sample Spike |
| 8 | Sample |
| 9 | Sample |
| 10 | Sample |
| 11 | Sample |
| 12 | Rinse Blank |
| 13 | CCV-2 |
| 14 | CCB-2 |
| 15 | 9 more Samples |
| 16 | CCV-3 |
| 17-26 | CCB-3 Repeat steps 5-28 for remainder of samples. |

**CAS/KELSO DATA QUALITY OBJECTIVES – Table 4**

| METHOD | ANALYTE | MATRIX | MDLa | MRL | LODb | LOQc | UNITS | Accuracy (LCS %Rec.) | Matrix Spike (%Rec.) | Precision (% RPD) |
|---|---|---|---|---|---|---|---|---|---|---|
| 350.1 | Ammonia as Nitrogen | Water | 0.02 | 0.05 | 0.04 | 0.05 | mg/L | 90-110 | 90-110 | 20 |
| 350.1 LL | Ammonia as Nitrogen | Water | 0.003 | 0.01 | 0.006 | 0.01 | mg/L | 90-110 | 90-110 | 20 |
| 350.1 Mod | Ammonia as Nitrogen | Soil | 0.04 | 0.5 | 0.1 | 0.5 | mg/Kg | 90-110 | 55-135 | 32 |
| SM4500 NH3 G | Ammonia as Nitrogen | Water | 0.02 | 0.05 | 0.04 | 0.05 | mg/L | 90-110 | 90-110 | 20 |
| SM4500 NH3 G LL | Ammonia as Nitrogen | Water | 0.003 | 0.01 | 0.006 | 0.01 | mg/L | 90-110 | 90-110 | 20 |

a Method Detection Limits are subject to change as new MDL studies are completed.

a MDL is the smallest analyte concentration that can be demonstrated to be different from zero with 99% confidence

b The LOD is the smallest amount of a substance that must be present in a sample in order to be detected with 99% confidence. Verification is acceptable if the response is > 3x instrument noise.

c The LOQ is the lowest concentration of a substance that produces a quantitative result within specified limits of precision and bias.

# APPENDIX A

The calibration is determined using a linear regression that best fits the line of the X:Y pairs. The quality of the fit is determined by calculating the coefficient of determination (R2), also called the correlation coefficient.

The line of regression is calculated as follows:

Start with the equation for a line, y = mx + b. From here the line of regression can be determined.

$$m = \frac{n\sum(xy) - \sum x \sum y}{n\sum(x^2) - \left(\sum x\right)^2}$$

$$b = \frac{\sum y - m\sum x}{n}$$

Where:

$x$ = the values of the x variables.
$y$ = the values of the y variables.
$n$ = the number of data points.

Once the line of regression has been determined then the coefficient of determination can be calculated.

$$r^2 = \frac{\left(\sum xy - n\bar{x}\bar{y}\right)^2}{\left(\sum x^2 - \bar{x}\sum x\right) * \left(\sum y^2 - \bar{y}\sum y\right)}$$

If this SOP is accessed electronically, it is an uncontrolled copy and will not be updated.



# ATTACHMENTS

**Lachat and Bran & Luebbe Methods**

If this SOP is accessed electronically, it is an uncontrolled copy and will not be updated.

# QuikChem® Method 12-107-06-1-B

# DETERMINATION OF AMMONIA BY FLOW INJECTION ANALYSIS

**Written by Helen Jonland**

**Applications Group**

**Revision Date:**

**14 November 2001**

**LACHAT INSTRUMENTS**
**6645 WEST MILL ROAD**
**MILWAUKEE, WI 53218-1239 USA**

If this SOP is accessed electronically, it is an uncontrolled copy and will not be updated.

LACHAT INSTRUMENTS

## QuikChem® Method 12-107-06-1-B

# Ammonia (Phenolate) in 2 M KCl Soil Extracts

### 1 to 20 mg N/L

## – Principle –

Exchangeable ammonium is extracted from soil with 2 M KCl. The KCl extract is filtered and the filtrate is analyzed for ammonia by the phenolate method. This method is based on the Berthelot reaction. Ammonia reacts with alkaline phenol, then with sodium hypochlorite to form indophenol blue. Sodium nitroprusside (nitroferricyanide) is added to enhance sensitivity. The absorbance of the reaction product is measured at 630 nm, and is directly proportional to the original ammonia concentration.

## – Interferences –

1. Calcium and magnesium ions may precipitate if present in sufficient concentration. Tartrate or EDTA is added to the sample in-line in order to prevent this problem.
2. Color, turbidity and certain organic species may interfere. Turbidity is removed by manual filtration. Sample color may be corrected for by running the samples through the manifold without color formation. See System Note 5 for specific instructions.

## – Special Apparatus –

Please see Parts and Price list for Ordering Information

1. Heating Unit
2. PVC PUMP TUBES MUST BE USED FOR THIS METHOD

Revised by A. Vaclav 14 November 2001.Written and copyrighted © by H. Jonland 16 August 1988 by **Lachat Instruments, 6645 West Mill Road, Milwaukee, WI 53218-1239 USA**. Phone: 414-358-4200 FAX: 414-358-4206. This document is the property of Lachat Instruments. Unauthorized copying of this document is prohibited.

If this SOP is accessed electronically, it is an uncontrolled copy and will not be updated.

# CONTENTS

1. SCOPE AND APPLICATION ..... 1
2. INTERFERENCES ..... 1
3. SAFETY ..... 1
4. EQUIPMENT AND SUPPLIES ..... 1
5. REAGENTS AND STANDARDS ..... 2
    5.1. PREPARATION OF REAGENTS ..... 2
    5.2. PREPARATION OF STANDARDS ..... 3
6. SAMPLE COLLECTION, PRESERVATION AND STORAGE ..... 3
7. PROCEDURE ..... 4
    7.1. CALIBRATION PROCEDURE ..... 4
    7.2. SYSTEM NOTES ..... 4
8. DATA ANALYSIS AND CALCULATIONS ..... 5
9. METHOD PERFORMANCE ..... 5
10. REFERENCES ..... 5
11. TABLE, DIAGRAMS, FLOWCHARTS, AND VALIDATION DATA ..... 6
    11.1. DATA SYSTEM PARAMETERS FOR THE QUIKCHEM IV ..... 6
    11.2. SUPPORT DATA FOR THE QUIKCHEM IV ..... 7
    11.3. AMMONIA MANIFOLD DIAGRAM ..... 8

If this SOP is accessed electronically, it is an uncontrolled copy and will not be updated.

# QuikChem® Method 12-107-06-1-B

# DETERMINATION OF AMMONIA BY FLOW INJECTION ANALYSIS

## 1. SCOPE AND APPLICATION

1.1. This method covers the determination of ammonia in 2 M KCl soil extracts.

1.2. The applicable range is 1 to 20 mg N/L. The method throughput is 90 injections per hour.

## 2. INTERFERENCES

2.1. Calcium and magnesium ions may precipitate if present in sufficient concentration. EDTA is added to the sample in-line in order to prevent this problem.

2.2. Color, turbidity and certain organic species may interfere. Turbidity is removed by manual filtration. Sample color may be corrected for by running the samples through the manifold without color formation. See System Note 5 for specific instructions.

## 3. SAFETY

3.1. The toxicity or carcinogenicity of each reagent used in this method has not been fully established. Each chemical should be regarded as a potential health hazard and exposure should be as low as reasonably achievable. Cautions are included for known extremely hazardous materials.

3.2. Each laboratory is responsible for maintaining a current awareness file of the Occupational Health and Safety Act (OSHA) regulations regarding the safe handling of the chemicals specified in this method. A reference file of Material Safety Data sheets (MSDS) should be made available to all personnel involved in the chemical analysis. The preparation of a formal safety plan is also advisable.

3.3. The following chemicals have the potential to be highly toxic or hazardous, for detailed explanation consult the MSDS.

3.3.1. Phenol

3.3.2. Sodium Hydroxide

3.3.3. Sodium Nitroprusside

## 4. EQUIPMENT AND SUPPLIES

4.1. Balance -- analytical, capable of accurately weighing to the nearest 0.0001 g.

4.2. Glassware -- Class A volumetric flasks and pipettes or plastic containers as required. Samples may be stored in plastic or glass.

4.3. Flow injection analysis equipment designed to deliver and react sample and reagents in the required order and ratios.

4.3.1. Sampler

4.3.2. Multichannel proportioning pump

4.3.3. Reaction unit or manifold

4.3.4. Colorimetric detector

4.3.5. Data system

4.4. Special Apparatus

4.4.1. Heating unit

4.4.2. PVC PUMP TUBES MUST BE USED FOR THIS METHOD

# 5. REAGENTS AND STANDARDS

## 5.1. PREPARATION OF REAGENTS

Use deionized water (10 megohm) for all solutions.

**Degassing with helium:**

To prevent bubble formation, degas all solutions except the standards with helium. Use He at 140kPa (20 lb/in$^2$) through a helium degassing tube (Lachat Part No. 50100.) Bubble He through the solution for one minute.

**Reagent 1. Potassium Chloride Carrier and Standards Diluent, 2 M**

**By Volume:** In a **1 L** volumetric flask, dissolve **150 g potassium chloride** (KCl) in about **900 mL DI water**. Dilute to the mark with **DI water** and invert three times. Degas with helium.

**By Weight:** To a tared **1 L** container add **150 g potassium chloride** (KCl) and **941 g DI water.** Shake until dissolved. Degas with helium.

**Reagent 2. Sodium Phenolate**

**CAUTION:** Wear gloves. Phenol causes severe burns and is rapidly absorbed into the body through the skin.

**By Volume:** In a **1 L** volumetric flask, dissolve **88 mL 88% liquified phenol** or **83 g crystalline phenol** ($C_6H_5OH$) in approximately **600 mL DI water**. While stirring, slowly add **32 g sodium hydroxide** (NaOH). Cool, dilute to the mark with **DI water**, and invert three times. Prepare fresh every 3-5 days or when solution turns brown.

**By Weight:** To a tared **1 L** container, add **888 g DI water**. Add **94.2 g 88% liquified phenol** or **83 g crystalline phenol** ($C_6H_5OH$). While stirring, slowly add **32 g sodium hydroxide** (NaOH). Cool and invert three times to mix thoroughly. Prepare fresh every 3-5 days or when solution turns brown.

**Reagent 3. Sodium Hypochlorite**

Dilute **250 mL or 250 g 5.25% sodium hypochlorite** (NaOCl) to **500 mL or 500 g DI water**. Invert to mix. Prepare fresh daily.

**Reagent 4. Buffer**

In a **1 L** volumetric flask, dissolve **50.0 g disodium ethylenediamine tetraacetate** ($Na_2EDTA$) and **5.5 g sodium hydroxide** (NaOH) in about **900 mL DI water**. Dilute to the mark and invert three times. Degas with helium. Prepare fresh monthly.

**Reagent 5. Sodium Nitroprusside**

Dissolve **3.50 g sodium nitroprusside** in **1000 g** or **1 L DI water**. Prepare fresh every 1-2 weeks.

## 5.2. PREPARATION OF STANDARDS

To prepare the stock and working standards, the following containers will be requires:

**By Volume**: Two 1 L and six 250 mL volumetric flasks.

**By Weight**: Two 1 L, and six 250 mL containers.

**Standard 1. Stock Standard 1000 mg N/L as $NH_3$**

In a **1 L** volumetric flask dissolve **3.819 g ammonium chloride** ($NH_4Cl$) that has been dried for two hours at 110°C in about **800 mL KCl diluent** (Reagent 1). Dilute to the mark with **KCl diluent** (Reagent 1) and invert three times.

**Standard 2. Working Stock Standard Solution 100.0 mg N/L as $NH_3$**

**By Volume**: In a **1 L** volumetric flask, dilute **100 mL Stock Standard** (Standard 1) to the mark with **KCl diluent** (Reagent 1). Invert three times.

**By Weight:** To a tared **1 L** container add about **100 g Stock Standard** (Standard 1). Divide the actual weight of the solution by 0.1 and make up to this resulting total weight with **KCl diluent** (Reagent 1), using a wash bottle or disposable pipet to add the last 10 g or so.

| **Working Standards** (Prepare Daily) | **A** | **B** | **C** | **D** | **E** |
|---|---|---|---|---|---|
| Concentration mg N/L | 20 | 10 | 5 | 1 | 0 |

**By Volume**

| | | | | | |
|---|---|---|---|---|---|
| Volume (mL) of **stock standard 2** diluted to 250 mL with Reagent 1 | 50.0 | 25.0 | 12.5 | 2.5 | 0.0 |

**By Weight**

| | | | | | |
|---|---|---|---|---|---|
| Weight (g) of **stock standard 2** diluted to final weight (~250 g) divided by **factor** below with Reagent 1 | 50.0 | 25.0 | 12.5 | 2.5 | 0.0 |
| **Division Factor**<br>Divide exact weight of the standard by this **factor** to give the final weight | 0.2 | 0.1 | 0.05 | 0.01 | --- |

# 6. SAMPLE COLLECTION, PRESERVATION AND STORAGE

6.1. Ammonia is volatile and will leave the sample slowly, even through polyethylene bottles. The samples should be run within 24 hours. If this cannot be done, the samples should be adjusted to a pH of 3-5 with dilute phosphoric or sulfuric acid.

# 7. PROCEDURE

## 7.1. CALIBRATION PROCEDURE

7.1.1. Inspect all modules for proper connections.

7.1.2. Turn on power and all modules.

7.1.3. Place reagent feedlines into proper containers. Raise tension levers on pump tube cassettes.

7.1.4. Establish a stable baseline. Set zero on colorimeter. If necessary, manually inject a high standard to check gain.

7.1.5. Program data system to initial parameters or to those empirically determined.

7.1.6. Place calibration standards and blank in sample tray in descending order of concentration followed by unknowns and check standards.

7.1.7. At end of run, place all feedlines in deionized water. Flush system and pump dry.

7.1.8. Turn off pump, all modules, and release pump tube cassettes.

## 7.2. SYSTEM NOTES

7.2.1. If baseline drifts, peaks are too wide, or other problems with precision arise, clean the manifold by the following procedure:

7.2.2. Place all reagent lines in deionized water and pump to clear reagents (2-5 minutes).

7.2.3. Place reagent lines and carrier in 1 M hydrochloric acid (1 volume conc HCl added to 11volumes of deionized water) and pump for several minutes.

7.2.4. Place all reagent lines in deionized water and pump until the HCl is thoroughly washed out.

7.2.5. Resume pumping reagents.

7.2.6. If samples are colored or are suspected to show a background absorbance, this interference should be subtracted. This can be done by the following procedure:

7.2.6.1. Calibrate the system in the normal manner. (If using a 4000 series instrument, the baseline subtraction must be used.)

7.2.6.2. Disable the check standard or DQM features and analyze the samples.

7.2.6.3. Place reagent and carrier lines in DI water and allow the baseline to stabilize.

7.2.6.4. Inject samples again without recalibrating

7.2.6.5. Subtract the "background" concentration from the original concentration to give the corrected concentration.

Corrected Concentration = Original Concentration - Background Concentration

7.2.7. Use consumer bleaches with caution. Proprietary additives may contribute to staining of tubing and data quality.

7.2.8. Add reagents in the order that they appear on the manifold to reduce staining.

## 8. DATA ANALYSIS AND CALCULATIONS

8.1. Calibration is done by injecting standards. The data system will then prepare a calibration curve by plotting response versus standard concentration. Sample concentration is calculated from the regression equation.

8.2. Report only those values that fall between the lowest and highest calibration standards. Samples exceeding the highest standard should be diluted and reanalyzed.

8.3. Report results in mg N/L.

## 9. METHOD PERFORMANCE

9.1. The method support data are presented in section 11. This data was generated according to a Lachat Work Instruction during development of the method.

9.2. Although Lachat Instrument publishes method performance data, including MDL, precision, accuracy and carryover studies, we cannot guarantee that each laboratory will be capable of meeting such performance. Individual laboratory and instrument conditions, as well as laboratory technique, play a major role in determining method performance. The support data serves as a guide of the potential method performance. Some labs may not be able to reach this level of performance for various reasons, while other labs may exceed it.

## 10. REFERENCES

10.1. U.S. Environmental Protection Agency, Methods for Chemical Analysis of Water and Wastes, EPA-600/4-79--020, Revised March 1983, Method 350.1

# 11. TABLE, DIAGRAMS, FLOWCHARTS, AND VALIDATION DATA

## 11.1. DATA SYSTEM PARAMETERS FOR THE QUIKCHEM IV

Pump Speed: 35
Cycle Period: 40 s
Sample Loop Length: microloop
Load Period: 10 s
Inject Period: 30 s
Inject to start of peak period: 25 s
Inject to end of peak period: 60 s

**Gain:**

Gain: 260 x 1

If this SOP is accessed electronically, it is an uncontrolled copy and will not be updated.

## 11.2. SUPPORT DATA FOR THE QUIKCHEM IV

Det'Cole II Sample Report

8/16/1998 9: 4

Tray ID: Reference: 00001608

Method: ammonia Operator:

Tray Comments:

Analyte #1 ammonia Over Range

Use Calibration Yes Yes

Technique Area Area

---- Calibration ----

Seq 1 S.C. 0.99989 , 0.99999 ?

Calibration Statistics For Channel 1: ammonia

Seq: 1 Slope: 34.26416, Intercept: 1.026, CC: 0.9999 , Repns Used: 1-00000

| Std | Ave Repns | Conc | Derived | %Rec | Repns 1 | Repns 2 | Repns 3 |
|---|---|---|---|---|---|---|---|
| 6 F | 505 | 20.000 | 19.947 | 0.3 | 686 | 689 | 601 |
| 7 G | 340 | 10.000 | 10.122 | -1.2 | 340 | 340 | 345 |
| 8 H | 171 | 5.000 | 4.974 | 0.5 | 173 | 170 | 169 |
| 9 I | 69 | 2.000 | 1.978 | 1.1 | 68 | 70 | 69 |
| 10 J | 35 | 1.000 | 0.978 | 2.2 | 34 | 35 | 35 |

Press ID: if you want to delete (unselect) a data point, any key otherwise.

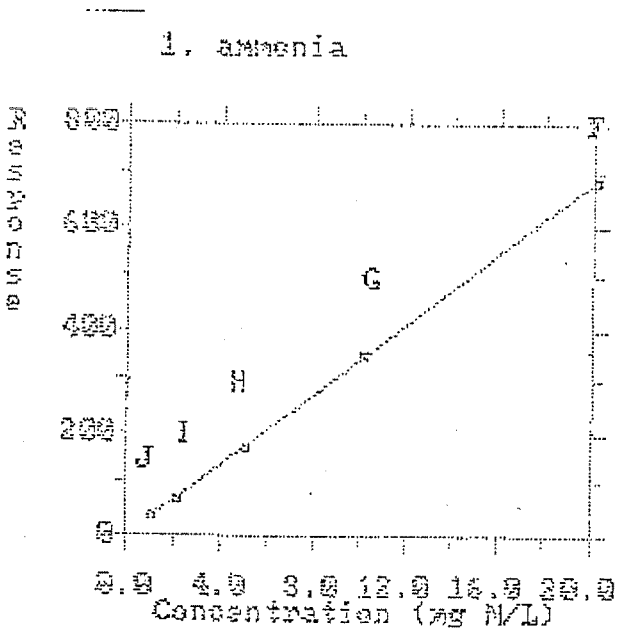


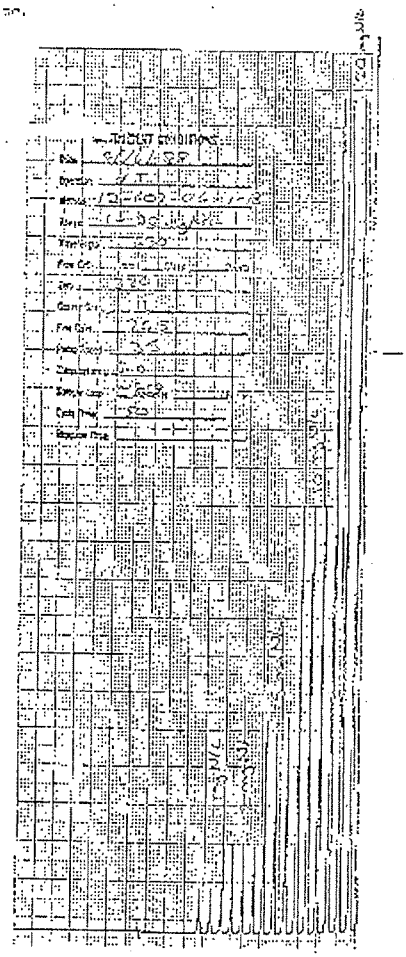

## 11.3. AMMONIA MANIFOLD DIAGRAM

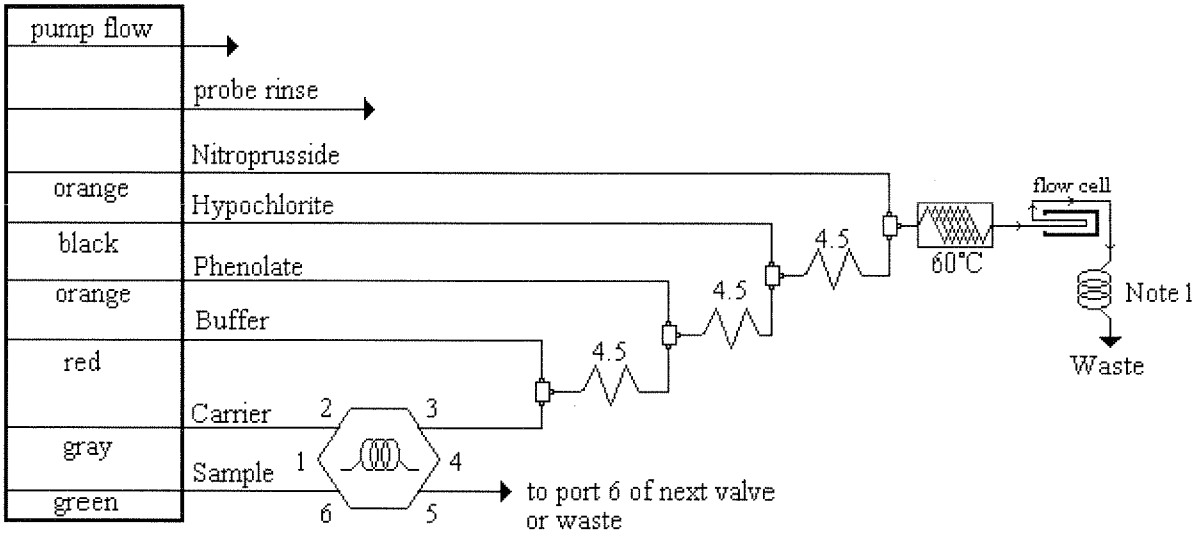


**Carrier:** **Reagent 1**
**Manifold Tubing:** **0.8 mm (0.032 in) i.d.** This is **5.2 µL/cm**.
**AE Sample Loop:** Microloop
**QC8000 Sample Loop:** Microloop
**Interference Filter:** 630 nm

---

**Apparatus:** An injection valve, a 10 mm path length flow cell, and a colorimetric detector module is required. The shows 650 cm of tubing wrapped around the heater block at the specified temperature.

**4.5:** **70** cm of tubing on a 4.5 cm coil support

---

**Note 1:** PVC PUMP TUBES MUST BE USED FOR THIS METHOD.

If this SOP is accessed electronically, it is an uncontrolled copy and will not be updated.

# QuikChem® Method 10-107-06-1-K

# DETERMINATION OF AMMONIA (PHENOLATE) BY FLOW INJECTION ANALYSIS

(LOW FLOW METHOD)

**Written by Dave Diamond**

**Applications Group**

**Revision Date:**

**15 March 2001**

**LACHAT INSTRUMENTS**
**5600 LINDBURGH DRIVE**
**LOVELAND, COLORADO 80539 USA**

If this SOP is accessed electronically, it is an uncontrolled copy and will not be updated.

LACHAT INSTRUMENTS
A Hach Company Brand

## QuikChem® Method 10-107-06-1-K

# Ammonia (Phenolate) in Potable and Surface Waters

### 0.2 to 20 mg N/L

## – Principle –

This method is based on the Berthelot reaction. Ammonia reacts with alkaline phenol, then with sodium hypochlorite to form indophenol blue. Sodium nitroprusside (nitroferricyanide) is added to enhance sensitivity. The absorbance of the reaction product is measured at 630 nm, and is directly proportional to the original ammonia concentration in the sample.

If distillation is required the sample is buffered at a pH of 9.5 with a borate buffer to decrease hydrolysis of cyanates and organic nitrogen compounds, and is distilled into a solution of boric acid.

## – Interferences –

1. Calcium and magnesium ions may precipitate if present in sufficient concentration. EDTA is added to the sample in-line in order to prevent this problem.
2. Color, turbidity and certain organic species may interfere. Turbidity is removed by manual filtration. Sample color may be corrected for by running the samples through the manifold without color formation.
3. Cyanate, which may be encountered in certain industrial effluents, will hydrolyze to some extent even at the pH of 9.5 at which distillation is carried out.
4. Residual chlorine must be removed by pretreatment of the sample with sodium thiosulfate or other reagents before distillation.
5. Method interference may be caused by contaminants in the reagent water, reagents, glassware, and other sample processing apparatus that bias analyte response.
6. Eliminate any marked variation in acidity or alkalinity among samples because intensity of measured color is pH dependent. Likewise, ensure that pH of standard ammonia solutions approximates that of samples.

## – Special Apparatus –

Please see Parts and Price list for Ordering Information

1. Heating Unit Lachat Part No. A85X00 (X=1 for 110V, X=2 for 220V)
2. PVC PUMP TUBES MUST BE USED FOR THIS METHOD.

Revised by D. Lynch on 15 March 2001. Written and copyrighted © by D. Diamond on 17 November 1995 by **Lachat Instruments, 5600 Lindburgh Drive, Loveland Colorado 80539 USA**. Phone: 970-663-1377 FAX: 970-962-6710. This document is the property of Lachat Instruments. Unauthorized copying of this document is prohibited.

If this SOP is accessed electronically, it is an uncontrolled copy and will not be updated.

**BRAN+LUEBBE**
1025 Busch Parkway Buffalo Grove, IL 60089
(847) 520-0700
FAX: (847) 520-0855

# *AutoAnalyzer Applications*

Method No. US- 696D-82X

## Ammonia in Water and Wastewater

Range: 0.010-3 mg/l N

**Description**

The automated procedure for the determination of ammonia utilizes the Berthelot Reaction, in whi the formation of a blue colored compound believed to be closely related to indophenol occurs whe the solution of an ammonium salt is added to sodium phenoxide, followed by the addition of sodiu hypochlorite. A solution of EDTA is added to the sample stream to eliminate the precipitation of th hydroxides of calcium and magnesium.[1,2,3,4,5,6] Sodium nitroprusside is added to intensify the blue color.

Hardware:
37°C heating bath (MT12)

Pump tubes:
7+1air+1 sampler wash

**Performance data using aqueous standards**

Test range 0010-3 mg/L N

| | AA3 | AAII |
|---|---|---|
| Sampling rate | 40/hr | 40/hr |
| Sample: wash ratio | 4:1 | 4/1 |
| Sensitivity at 3mg/L | 0.3576 | 0.22 |
| Reagent Absorbance | 0.062 | 0.4 |
| Coefficient of Variation 30 replicates at 1.5mg/L | 0.429 | 1.2 |
| Pooled standard deviation 25 at 5 levels | 0.013mg/L | NA |
| Correlation coefficient (Linear) | 0.9993 | NA |
| Detection limit (determined according to EPA procedure pt.135, app. B) | 0.016 | NA |
| Carryover | 0.2% | NA |
| Lag time | 9 min | NA |
| Base | -16465 | NA |
| Gain | 24 | NA |
| Lamp Intensity | 58 | NA |

Note: the above performance specifications were developed with the exclusive use of genuine Bran+Luebbe parts.
*Trademark of Atlas Chemical

1. Van Slyke, O.D. and Hillern, A.J., BioChem., 102, p.499, 1933
2. Kallman, S., Presentation at Div. 1 Meeting of ASTM Committee E-3, April,1967, San Diego, CA
3. Bolleter, W.T., Bushman, C.J. and Tidwell, P.N., Anal. Chem., 33, P.592, 1961.
4. Tellow, J.A. and Wilson, A.L., Analyst, 89, p.453, 1954.
5. Tarugi, A. and Lenci, F., Boll Chim. Farm., 50, p.9070. 1912.
6. VWPCA Methods of Chem. Anal. of Water & Wastewater, November 1969, p.137.

If this SOP is accessed electronically, it is an uncontrolled copy and will not be updated.

BRAN+LUEBBE
1025 Busch Parkway Buffalo Grove, IL 60089
(847) 520-0700
FAX: (847) 520-0855



## Reagents

Unless otherwise specified, all chemicals should be of ACS grade or equivalent.

## List of Raw Materials

Ammonium Sulfate $(NH_3)_2SO_4$) Primary Standard Grade
Brij-35, 30% Solution*
Disodium, ethylenediamine-tetracetate
Phenol, loose crystals ($C_6H_5OH$)
Sodium Hydroxide (NaOH)
Sodium Hypochlorite, 5% Solution (NaOCl) Commercial Grade; e.g. Clorox
Sodium Nitroprusside ($Na_2Fe(CN)_5NO.2H_2O$)
Sulfuric Acid, conc. ($H_2SO_4$)

## Reagent Make-Up

All water used in reagent and standard preparation must be ammonia free.

### Alkaline Phenol

| | |
|---|---|
| Phenol, loose crystals | 83 g |
| Sodium Hydroxide, solid | 48 g |
| Distilled Water, qs | 1000 ml |

Preparation:
Add 83 g of loose crystal phenol to about 800 ml of distilled water. While cooling under tap water or in an ice bath, slowly with swirling add 48 g of sodium hydroxide. Cool to room temperature, dilute to 1000 ml with distilled water and mix thoroughly. Store in an amber glass container. This material is corrosive. Stability: Two weeks.

### Sodium Hypochlorite Solution

| | |
|---|---|
| Sodium Hypochlorite Solution, 5% | 210 ml |
| Distilled Water, qs | 500 ml |

Preparation:
Dilute 210 ml of sodium hypochlorite solution 5% to 500 ml with distilled water and mix thoroughly. Prepare fresh weekly.

### Sodium Nitroprusside Solution

| | |
|---|---|
| Sodium Nitroprusside | 3.5 g |
| Distilled Water, qs | 1000 ml |

Preparation:
Dissolve 3.5 g of sodium nitroprusside in about 600 ml of distilled water. Dilute to one liter with distilled water and mix thoroughly. Store in an amber container. Stability: One month.

If this SOP is accessed electronically, it is an uncontrolled copy and will not be updated.

BRAN+LUEBBE
1025 Busch Parkway Buffalo Grove, IL 60089
(847) 520-0700
FAX: (847) 520-0855



**Disodium EDTA**

| | |
|---|---|
| Disodium EDTA | 33.6 g |
| Sodium Hydroxide, 50% w/w | 0.8 g |
| Distilled Water, qs | 1000 ml |
| Brij-35 | 2 ml |

Preparation:
Dissolve approximately 0.8 g of 50% w/w sodium hydroxide and 33.6 g of disodiurn EDTA in about 800 ml of distilled water. Dilute to one liter. Add 2 ml of Brij-35 and mix well.

**Standard Preparation**

**Stock standard A, 100 mg/L N**

| | |
|---|---|
| Ammonium Sulfate | 0.4717 g |
| Chloroform | 1 ml |
| Distilled Water, qs | 1000 ml |

Preparation:
In a one liter volumetric flask containing about 800 ml of distilled water dissolve 1 ml of chloroform. Add 0.4717 g of ammonium sulfate and swirl to dissolve. Dilute to one liter with distilled water and mix thoroughly.

**Stock Standard B. 20 mg/L N**

| | |
|---|---|
| Stock Standard A | 20.0 ml |
| Distilled Water, qs | 100 ml |

Preparation:
Dilute 20.0 ml of stock standard A to 100 ml with distilled water and mix thoroughly. Prepare fresh daily.

**Working Standard Solutions**

| ml Stock B | mg/l N |
|---|---|
| 2.0 | 0.4 |
| 4.0 | 0.8 |
| 6.0 | 1.2 |
| 8.0 | 1.6 |
| 10.0 | 2.0 |
| 15.0 | 3.0 |

Preparation:
Transfer aliquots of Stock Standard 6 as noted above, to individual 100 ml volumetric flasks. Dilute to volume with distilled water and mix thoroughly. Prepare fresh daily.

If this SOP is accessed electronically, it is an uncontrolled copy and will not be updated.

BRAN+LUEBBE
1025 Busch Parkway Buffalo Grove, IL 60089
(847) 520-0700
FAX: (847) 520-0855



## Sample Preparation

1. Preserve by addition of 2 ml/L $H_2SO_4$ and refrigerate at 4° C.
2. Sample turbidity should be removed by filtration prior to analysis. It may interfere with this chemistry.
3. Sample cups can be rinsed with 1:1 hydrochloric acid, followed by distilled water and finally by an aliquot of the sample itself.

## System Cleansing Procedure

Pump 5N $H_2SO_4$ as the cleaning solution.

## System Performance

| | |
|---|---|
| Maximum reagent/water baseline | 0.40 AU |
| Reagent Equilibration time | 5 min |
| Sensitivity of high standard at a STD CAL of 1.0 | 0.22 AU |
| Coefficient of Variation | 1.2% |

## Flow Diagram

1. If analysis is to be performed in a contaminated environment, scrub the air with 5N H2SO4
2. Check that the appropriate harness and optical filters are secured in their proper positions.

## CONSUMMABLES

The following annual consumption rates are based on system operation 8 hours/day, 250 days/year.

| Description | Part Number | Est. Annual Usage |
|---|---|---|
| ORN/BLU, 0.05mL/min | 116-0549-03 | 5pkg./12 |
| ORN/YEL, 0.16mL/min | 116-0549-05 | 3pkg./12 |
| BLK/BLK, 0.32mL/min | 116-0549-07 | 5pkg./12 |
| ORN/ORN, 0.42mL/min | 116-0549-08 | 3pkg./12 |
| WHT/WHT, 0.60mL/min | 116-0549-09 | 3pkg./12 |
| GRY/GRY, 1.00mL/min | 116-0549-11 | 3pkg./12 |
| GRN/GRN, 2.00mL/min | 116-0549-14 | 3pkg./12 |
| Tubing air bar silicone | 116-0543-01 | 8 ft. |
| Tubing Kel-F, 0.050" ID | 171-0745-01 | 3 ft. |
| Tubing Polyeth., 0.015" ID | 562-2002-01 | 3 ft. |
| Tubing Polyeth, 0.030" ID | 562-2003-01 | 3 ft. |

If this SOP is accessed electronically, it is an uncontrolled copy and will not be updated.

BRAN+LUEBBE
1025 Busch Parkway Buffalo Grove, IL 60089
(847) 520-0700
FAX: (847) 520-0855



| **SPARES** | Part Number | Recommended |
|---|---|---|
| AA3 Flowcell, 1.5 x 10mm | 169+B040-01 | 1pc. |
| AAII Flowcell, 1.5 x15mm | 199-B018-01 | 1pc. |
| AA3 Filter, 660nm | 165-B044-66 | 1pc. |
| AAII Filter, 660nm | 170-B070-26 | 1pc. |
| AAII Heating Bath, 7.7mL, 37°C | 157-B273-03 | 1pc. |
| AA3 Heating Bath Coil, 5.37mL | 169+B440-03 | 1pc. |
| 5-turn mixing coil, right | 170-0103-01 | 1pc. |
| 5-turn mixing coil, left | 170-0426-01 | 1pc. |
| 10-turn mixing coil | 157-0226-01 | 1pc. |
| Glass fitting, A10 | 116-B034-01 | 1pc. |
| Injection Fitting | 116-0489-01 | 1pc. |
| Straight tube | 116-G004-01 | 1pc. |
| Glass U | 172-9038-01 | 1pc. |
| Glass Z | 170-0204-01 | 1pc. |
| Glass tube | 170-G022-01 | 1pc. |
| Glass tube with injection | 170-G071-01 | 1pc. |

If this SOP is accessed electronically, it is an uncontrolled copy and will not be updated.

BRAN+LUEBBE
1025 Busch Parkway Buffalo Grove, IL 60089
(847) 520-0700
FAX: (847) 520-0855

BRAN+LUEBBE

# Method 696D-82W

Ammonia in water and wastewater
Manifold 116-D857-01
Harness number: 116-B346-01
Range: 0.02-3mg/L $NH_3$-N

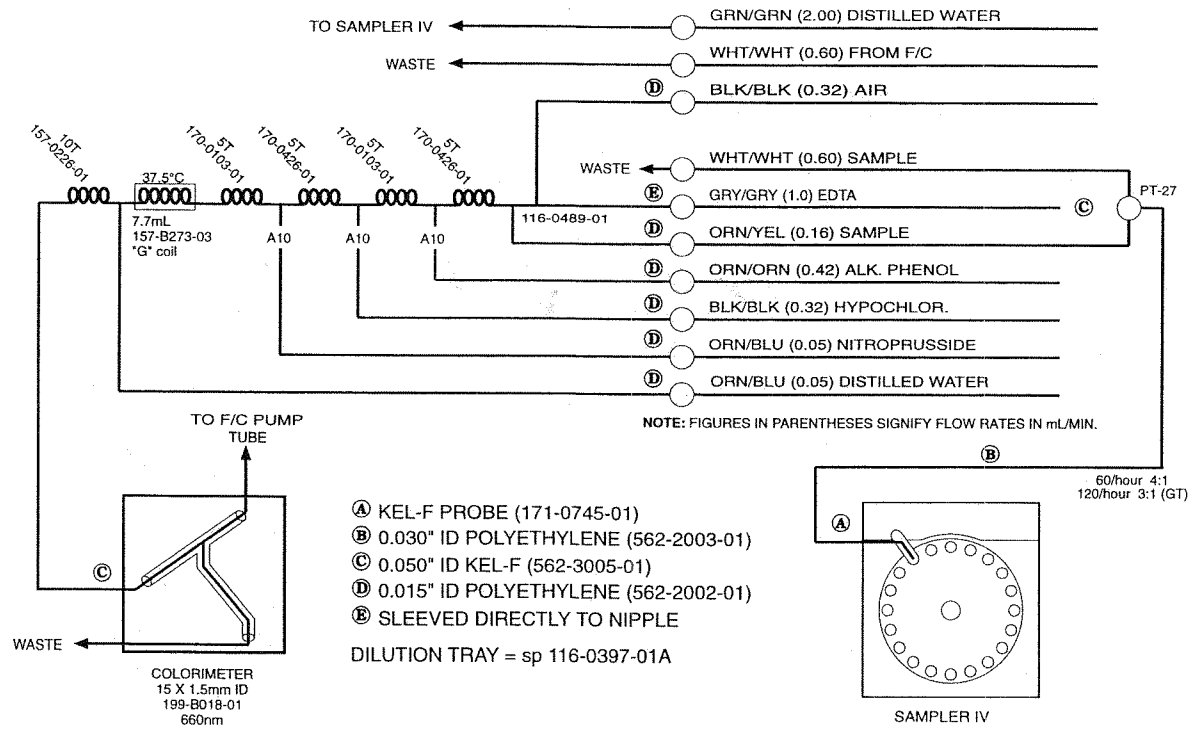


4/8/94